REVISIONS			
REV	DESCRIPTION	DATE	APPROVED
A	INITIAL RELEASE (ESR 0335)	12-21-95	JWM
B	SEE ECN 90425	09-10-97	JWM

NOTES:

1. MATERIAL:

INSULATOR MATERIAL – GLASS FILLED THERMO-PLASTIC POLYESTER, 94V-0 RATED, BLACK.

CONTACT MATERIAL – CDA 510.

CONTACT PLATING – .000030 Au OVER .000050 Ni ON CONTACT POINT, TAIL AND COMPLIANT SECTION .000100 MATTE FINISH 60/40 SnPb.

2. ELECTRICAL CHARACTERISTICS:

CONTACT RESISTANCE:
CONTACT TO DAUGHTER CARD – 10 MILLIOHMS MAX.
COMPLIANT SECTION TO P.T.H. – 2MILLIOHMS.

DIELECTRIC WITHSTANDING VOLTAGE – 1500 VAC.

INSULATION RESISTANCE – 5000 MEGOHMS.

CONTACT CURRENT RATING – 3 AMPS AT 30°C.

3. MECHANICAL CHARACTERISTICS:

OPERATING TEMPERATURE – -55° TO +125°C.

DURABILITY – PER BELLCORE TR-NWT-000078.

P.C. BOARD INSERTION FORCE – 16 Oz PER CONTACT PAIR MAXIMUM WITH .071 THICK TEST GAUGE.

P.C. BOARD WITHDRAWL FORCE – 1 Oz PER CONTACT PAIR MINIMUM WITH .054 THICK TEST GAUGE.

INSERTION FORCE – COMPLIANT SECTION 40 lbs MAXIMUM PER CONTACT.

WITHDRAWAL FORCE – COMPLIANT SECTION 10 lbs MINIMUM PER CONTACT.

HOLE SIZE REQUIRMENTS:
DRILLED HOLE DIA: .0453±.001.
PLATING: .001 TO .003 COPPER AND .0001 TO .0008 SOLDER.

FINISHED HOLE DIA: .040±.003.

4 .300 AND .350 CARD SLOT DEPTH CONTROLLED BY THESE SURFACES ONLY.

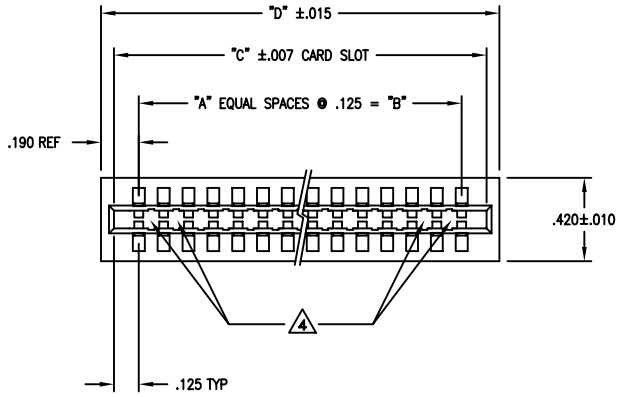

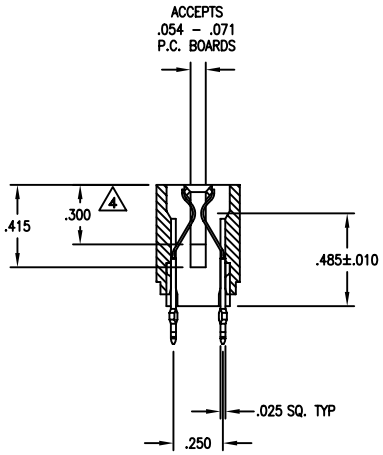

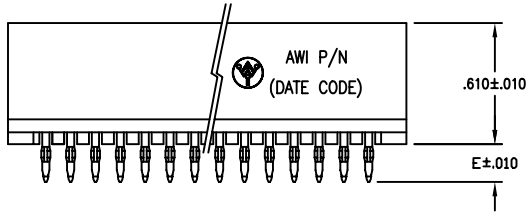

DIMENSIONS

A	NUMBER OF EQUAL SPACES	(TO DETERMINE, SUBTRACT 1 FROM THE NUMBER OF DESIRED DUAL CONTACT POSITIONS)
B	NUMBER OF EQUAL SPACES	X .125
C	NUMBER OF EQUAL SPACES	X .125 + .250
D	NUMBER OF EQUAL SPACES	X .125 + .380
E	TAIL LENGTH: SEE PART NUMBERING	

PART NUMBERING

23 XX L – X X – 52 – 382

SERIES CODE

NUMBER OF DUAL POSITONS
10 THROUGH 50

BODY STYLE
L – WITHOUT CARD SCOOPS

CARD SLOT DEPTH (SEE NOTE 4)
1 – .415
2 – .350
3 – .300

TAIL LENGTH (E DIMENSION)
1 – .190
2 – .375
3 – .465
4 – .570
5 – .650

PLATING CODE (SEE NOTES)

VARIATION CODE (.610 HIGH INSULATOR)

CUSTOMER DRAWING

APPROVED		
	NAME	DATE
DRAWN	JWM	12-95
CHECKED	YL	12-95
QUALITY	WBK	12-95
APPROVED	JWM	12-95

THE INFORMATION, DATA AND/OR SPECIFICATIONS CONTAINED ON THIS DOCUMENT ARE PROPRIETARY TO A.W. INDUSTRIES AND MAY NOT BE COPIED, DUPLICATED OR DISCLOSED IN PART OR WHOLE WITHOUT AUTHORIZATION IN WRITING FROM A.W. INDUSTRIES.

ALL DIMENSIONS ARE IN INCHES.

TOLERANCES:
DECIMAL .XX ±.015
.XXX ±.005
ANGLE ±1/2°

TITLE: COMPLIANT PIN PRESS FIT CARD EDGE CONNECTOR .125 X .250 CENTERS

A.W. Industries, incorporated
6788 N.W. 17th AVENUE
Fort Lauderdale,Fl 33309

SIZE C | DWG. NO. 23XXL-XX-52-382
SCALE NONE | ACAD FILE NO. 0302950B | SHEET 1 OF 1